PRESYS®

SISTEMA DE GESTÃO QUALIDADE
TÜVRheinland
Brasil
NBR ISO 9001

Dry Block Calibrators

T-350P and T-650P

Technical Manual

EM0070-07

WARNING!

Avoid electric shock risk on touching the equipment:
- Use only suitable power cable with earth connection;
- Never power the equipment to the mains socket with no earth connection.

WARNING!

High voltage is present inside these equipments. It can cause great damages and injuries.

Do not make any repair service inside the equipment without removing the plug from the supply.

WARNING!

Much electromagnetic noise can cause instability to the equipment.
The equipment is provided with electromagnetic interference filters that protect not only the mains but also the equipment itself against noise. These filters have no function if the unit is not earthed properly.

WARNING!

High temperatures are achieved in these equipments.
Risk of fire and explosion are present in case safety measures are not taken. Sign by means of warnings the hazardous areas at high temperatures.
Do not place the dry-block on inflammable surfaces or even on materials that can be deformed due to high temperatures.
Do not obstruct any air-vent to avoid risk of fire in the equipment.

WARNING!

The instruments described in this technical manual are equipment for use in specialized technical area.
The user is responsible for configuration and selection of values of the parameters of the instruments.
The manufacturer warns against the risk of incidents with injuries to both persons and property, resulting from the incorrect use of the instrument.

WARNING!

Never remove the insert from the dry-block or the thermo-elements from the insert, while they are in temperatures far from the ambient. Wait until they reach the ambient temperature so that the heterogeneous cooling of the parts do not jam each other. If, by chance, it happens a jamming situation, refer to item *Instructions for Insert Jamming* to proceed properly.

Disposal calibrator:

NO HOUSEHOLD WASTE!

The calibrator of the series T Calibrator consist of various different materials. It must not be disposed of with household waste.

The warranty conditions are available in our site:
www.presys.com.br/warranty

PRESYS

Table of Contents

1 - Introduction 3
1.1 - Technical Specifications 4
1.1.1 - Input Technical Specifications 5
1.2 - Order Code 5
1.3 - Accessories 6
1.4 - Instruction for use of the optional Black Body insert 7
1.5 - Sensor Guide 9

2 - Calibrator Operation 9
2.1 - Menu IN 11
2.1.1 - Input Connections Diagrams 12
2.1.2 - External Probe Connection 13
2.2 - Menu CONF 14
2.3 - Manual Operating Mode 18
2.4 - Programmable Operating Mode 18
2.5 - Automatic Operating Mode 19

3 - Recommendations as regards Accuracy of Measurements 21
3.1 - Getting a Better Accuracy from the Dry Block 21
3.2 - Recommendations to Other types of Insert 22

4 - Safety Instructions 23

5 - Calibrator Warning Messages 23

6 - PID Control Parameters 24

7 - Calibration (Adjustment) 25
7.1 - Input Calibration 25
7.2 - Probe Calibration 26

8 - Maintenance 28
8.1 - Instructions for Hardware 28
8.2 - Instructions for Insert Jamming 28

9 - Tiny Steel Balls, Recommendations of Use and Safety Instructions 29

PRESYS

1 - Introduction

T-350P / T-650P

T-350P / **T-650P** dry block calibrators control temperature of an insert in order to calibrate thermocouples, thermoresistances, glass thermometers, thermoswitches etc. Besides providing high accuracy temperature values, they also allow the measurement of signals generated by thermo-elements like thermocouples, RTDs and thermoswitches, which are being calibrated. This is possible due to an embedded calibrator specific for these types of signal, including 4-20 mA. Thus, they incorporate the functions of dry block, standard thermometer and calibrator for RTD, TC and also mA.

The calibrator also includes an external probe input to allow the temperature control from a standard PRT sensor (optional) placed in the insert together with the sensors to be calibrated, increasing accuracy and decreasing setpoint errors and block loading effects. The sensor calibration curve is configured according to the Callendar-Van Dusen parametrization.

- T-350P / T-650P calibrators model generate temperatures from room temperature to 350ºC (662ºF) and 650ºC (1202ºF), respectively.
- Present input for thermocouples, thermoresistances, thermoswitches. Besides generating temperature, they measure the signal from the sensor being calibrated.
- Allows the control of the dry block temperature by using an external probe (optional). The temperature calculation uses Callendar-Van Dusen coefficients.
- Make no use of external standard thermometer.
- Carry out completely automatic calibrations with or without the use of a computer.
- Display accuracy to 0.1 ºC ± 0.1 % of reading, stability of 0.05 ºC and resolution of 0.01 ºC.
- Documenting capabilities: communication with computer and the ISOPLAN Calibration Software.
- Portable, compact, provide interchangeable inserts and soft carrying case.

They present a wide variety of programming resources, allowing the performance of automatic calibrations of thermocouples, thermoresistances, thermoswitches. In this

case, the sensor is placed in the insert and its electrical terminals are connected to the embedded calibrator. The operator defines the calibration points and the number of repetitions, then the process is started and all the sequence is automatically accomplished.

Another way of performing automatic documented calibrations is by means of the ISOPLAN Calibration Software for PC/WindowsTM, which uses RS-232 or RS-485 serial communication to connect the computer to the calibrator. With ISOPLAN it is possible to register sensors and instruments of a factory, generate work orders, create and print calibrations certificates and reports, that is, it brings all advantages of computer data management to the calibration environment.

T-350P and **T-650P** have also many other features, such as:

- The electric signal calibrator is independent from the dry block function.
- Internal buzzer beeps when the temperature reaches the desired value.
- Keypad that eases the operation and configuration of the calibrator.
- OLED graphic display for presenting large digits.
- Thermo-element reading scaled to ITS-90 or IPTS-68.
- Internal regulated 24 Vdc power supply for 2-wire transmitters.
- Internal rechargeable battery and battery charger included in the electric signal calibrator.
- Independent circuit for over-temperature protection and safety.
- Insert to choose, carrying case, strap and test leads included.
- Cup like insert with a set of tiny balls made of steel used for fulfillment included.

The calibrator operates with Nickel-Metal Hydride (Ni-MH) batteries.

1.1 - Technical Specifications

	T-350P	**T-650P**
Operating Range	from room temperature to 350 ºC (662 ºF)	from room temperature to 650ºC (1202 ºF)
Display Accuracy	± (0.1 ºC + 0.1 % of reading)	
Resolution	0.01 ºC (0.01 ºF)	
Stability	± 0.05 ºC	
Axial Uniformity(40 mm)	± 0.05 ºC @ 50 °C ± 0.10 ºC @ 150 °C ± 0.15 ºC @ 350 °C	± 0.10 ºC @ 50 °C ± 0.35 ºC @ 300 °C ± 0.60 ºC @ 650 °C
Radial Uniformity	± 0.02 ºC @ 50 °C ± 0.03 ºC @ 150 °C ± 0.04 ºC @ 350 °C	± 0.05 ºC @ 50 °C ± 0.10 ºC @ 300 °C ± 0.20 ºC @ 650 °C
Heating Rate	13 minutes (50ºC to 350ºC)	18 minutes (50 ºC to 650 ºC)
Cooling Rate	12 minutes (350ºC to 100ºC)	22 minutes (650 ºC to 100 ºC)
Weight	7.5 kg	9.5 kg
Power Supply	115 Vac or 230Vac 50/60Hz, according to order code.	
Power Consumption	500W	1000W
Units / Temperature Scales:	ºC or ºF / IPTS-68 or ITS-90, selected by the user	
Well Diameter / Depth	Ø 32 mm x 124 mm	
Dimensions (H,W,D)	352 x 199 x 310 mm	
Environmental Operating Conditions	0 to 50 ºC / 0 to 90 % RH	

1.1.1 - Input Technical Specifications

Input Ranges		Resolution	Accuracy	Remarks
Ext. Probe[1]	0 to 400 Ω	0.01 Ω	± 0.005 % FS	
Ext. Probe[1]	-200 to 850 ºC / -328 to 1562 °F	0.01 ºC / 0.01 ºF	± 0.05 ºC / ± 0.1 ºF	IEC-60751
millivolt	-150 to 150mV 150 to 2450mV	0.001mV 0.01mV	± 0.01% FS ± 0.02% FS	R_{input} > 10M Ω auto-ranging
mA	-1 to 24.5mA	0.0001 mA	± 0.01% FS	R_{input} < 160 Ω
Resistance	0 to 400 Ω 400 to 2500 Ω	0.01 Ω 0.01 Ω	± 0.01% FS ± 0.03% FS	excitation current 0.9 mA (auto-range)
Pt-100	-200 to 850 ºC / -328 to 1562 ºF	0.01 ºC / 0.01 ºF	± 0.1 ºC / ± 0.2 ºF	IEC-60751
Pt-1000	-200 to 400 ºC / -328 to 752 ºF	0.1 ºC / 0.1 ºF	± 0.1 ºC / ± 0.2 ºF	IEC-60751
Cu-10	-200 to 260 ºC / -328 to 500 ºF	0.1 ºC / 0.1 ºF	± 2.0 ºC / ± 4.0 ºF	Minco 16-9
Ni-100	-60 to 250 ºC / -76 to 482 ºF	0.1 ºC / 0.1 ºF	± 0.2 ºC / ± 0.4 ºF	DIN-43760
TC-J	-210 to 1200 ºC / -346 to 2192 ºF	0.1 ºC / 0.1 ºF	± 0.2 ºC / ± 0.4 ºF	IEC-60584
TC-K	-270 to -150 ºC / -454 to -238 ºF -150 to 1370 ºC / -238 to 2498 ºF	0.1 ºC / 0.1 ºF 0.1 ºC / 0.1 ºF	± 0.5 ºC / ± 1.0 ºF ± 0.2 ºC / ± 0.4 ºF	IEC-60584
TC-T	-260 to -200 ºC / -436 to -328 ºF -200 to -75 ºC / -328 to -103 ºF -75 to 400 ºC / -103 to 752 ºF	0.1 ºC / 0.1 ºF 0.1 ºC / 0.1 ºF 0.1 ºC / 0.1 ºF	± 0.6 ºC / ± 1.2 ºF ± 0.4 ºC / ± 0.8 ºF ± 0.2 ºC / ± 0.4 ºF	IEC-60584
TC-E	-270 to -150 ºC / -454 to -238 ºF -150 to 1000 ºC / -238 to 1832 ºF	0.1 ºC / 0.1 ºF 0.1 ºC / 0.1 ºF	± 0.3 ºC / ± 0.6 ºF ± 0.1 ºC / ± 0.2 ºF	IEC-60584
TC-N	-260 to -200 ºC / -436 to -328 ºF -200 to -20 ºC / -328 to -4 ºF -20 to 1300 ºC / -4 to 2372 ºF	0.1 ºC / 0.1 ºF 0.1 ºC / 0.1 ºF 0.1 ºC / 0.1 ºF	± 1.0 ºC / ± 2.0 ºF ± 0.4 ºC / ± 0.8 ºF ± 0.2 ºC / ± 0.4 ºF	IEC-60584
TC-L	-200 to 900 ºC / -328 to 1652 ºF	0.1 ºC / 0.1 ºF	± 0.2 ºC / ± 0.4 ºF	DIN-43710

FS: Full Scale

Note ([1]): Accuracy referring only to input for external probe. The value does not include sensor accuracy or errors resulting from the sensor characterization.

Accuracy values are valid within one year and ambient temperature range from 20 to 26 °C. Outside these limits add 0.001 % FS / °C, taking 23 °C as the reference temperature. For thermocouples with internal cold junction compensation, add a cold junction compensation error of ± 0.2 °C or ± 0.4 °F

1.2 - Order Code

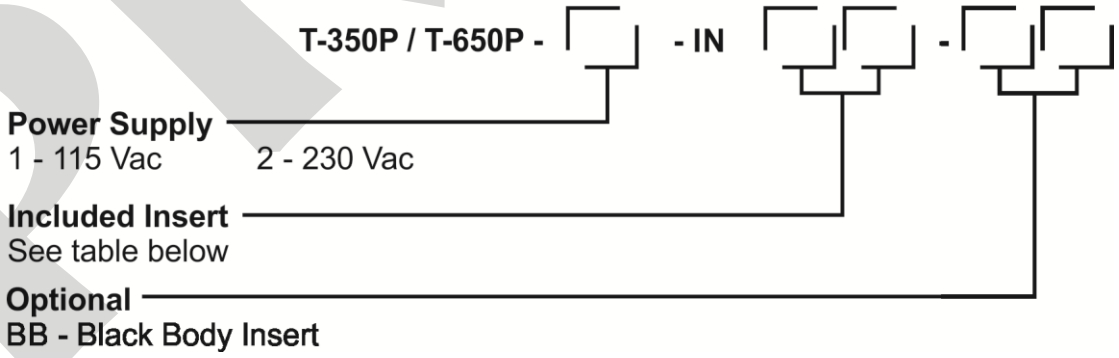

1.3 - Accessories

- **Insert:**

Inserts	Holes	Order Code	
		T-350P	**T-650P**
IN01	1 x 3/4"	06.04.0101-00	06.04.0111-00
IN02	1 x 1/2"	06.04.0102-00	06.04.0112-00
IN03	1 x 6.0mm and 3 x 1/4"	06.04.0103-00	06.04.0113-00
IN04	3 x 6.0mm and 1 x 1/4"	06.04.0104-00	06.04.0114-00
IN05	4 x 6.0mm	06.04.0105-00	06.04.0115-00
IN06	2 x 6.0mm and 2 x 1/4"	06.04.0106-00	06.04.0116-00
IN07	1 x 6.0mm, 1 x 8.0mm and 1 x 3/8"	06.04.0107-00	06.04.0117-00
IN08	1 x 6.0mm, 1 x 3.0mm and 2 x 1/4"	06.04.0108-00	06.04.0118-00
IN09	without hole, to be drilled by the client.	06.04.0109-00	06.04.0119-00
IN10	Others, under ordering.	06.04.0110-00	06.04.0120-00
IN1P	1 x 3.0 mm, 1 x 6.0 mm, 1 x 8.0 mm and 1 x 1/4"	06.04.0128-00	06.04.0131-00
IN1A	1 x 1/8”, 1 x 3/16”, 2 x ¼” and 1 x 3/8"	06.04.0129-00	06.04.0132-00
IN1E	1 x 4.0 mm, 1 x 6.0 mm, 1 x 8.0 mm, 1 x 10.0 mm and 1 x ¼”	06.04.0130-00	06.04.0133-00

- **Black Body Insert - Order Code: BB**
  T-350P: Insert in cylindrical format that surrounds the block, avoiding reflections of the inner wall of the well and bottom with a face of special geometry to provide high emissivity.
  T-650P: Insert in flat round format with a special geometry face to provide high emissivity. Installed in the bottom of the furnace well, it is a high emissivity black body cavity for the calibration of infrared thermometers.

- **Temperature Sensors:**

Description	Order Code
1/5 DIN Probe straight (mini-DIN connector)	04.06.0001 - 21
1/5 DIN Probe 90º bend (mini-DIN connector)	04.06.0007 - 21
1/5 DIN Probe 90º bend up to 660 °C (mini-DIN connector)	04.06.0009 - 21

- **Communication Interface:**

Description	Order Code
RS-232 - DB-9 (F) Connector (COM1)	06.02.0002 - 00
RS-485	06.02.0006 - 00

- **Soft Carrying Case.** Order code: 06.01.0006-00.

- **ISOPLAN Software.**

- **Calibration Certificate.**

1.4 - Instruction for use of the optional Black Body insert

- ***Black Body Insert***

Identify the following parts and proceed to the mounting as explained:

- Metallic Insert type Black Body:

  T-350P - Mount the N-type thermocouple to the bottom hole and aligned with the slot on the side of the cylinder. It must be inserted into the bottom of the well with the help of the insert extractor.

  T-650P - It should be introduced to the bottom of the well with the help of a N-type thermocouple, mounted laterally. There is even a screw type puller that can be threaded into the center of the blackbody's target to assist in the task of gently lowering the target.

- N-type thermocouple

Connect the N-type thermocouple terminals to the side auxiliary input of the calibrator and set the input reading for the N-type thermocouple input.

The mounted assembly constitutes an excellent black body cavity with emissivity of above 0.95 and effective target of Ø 31 mm for the model T-650P and Ø 28 mm for the model T-350P, suitable for calibrating infrared thermometers.

Align the infrared thermometer to be calibrated with the black body cavity in the upright position. Respect the distancing of the infrared thermometer to be calibrated against the bottom of the blackbody cavity with the effective target size as specified in the manual of the thermometer.

Remember that the area targeted by the infrared thermometer to be calibrated must be less than or equal to the effective target body size of the blackbody in order to avoid introducing measurement errors.

Use the N-type thermocouple calibration certificate to correct the reading of the input of the calibrator and compare it to the reading of the infrared thermometer.

PRESYS

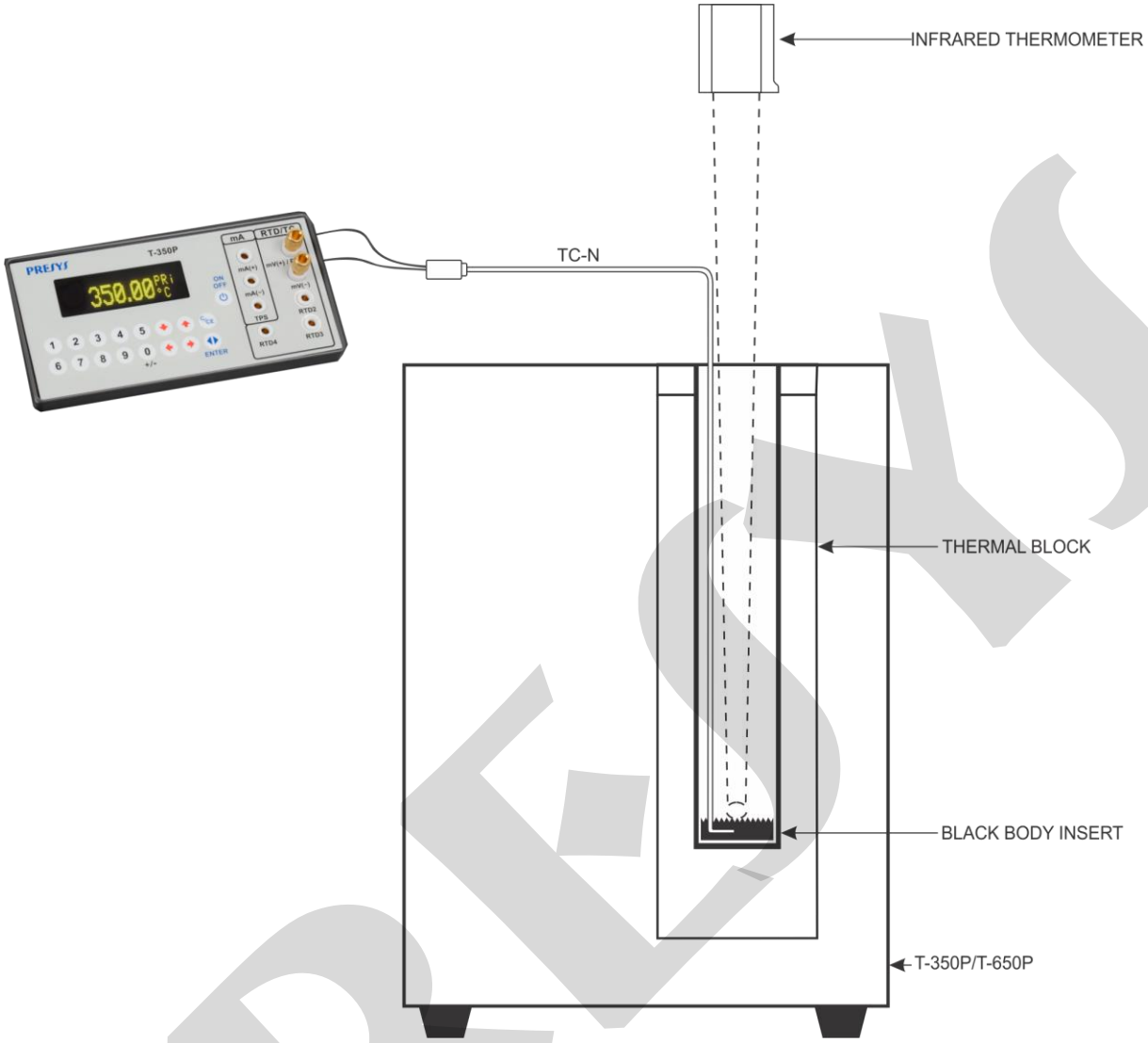

SCHEMATIC VIEW FOR MOUNTING OF THE BLACK BODY CAVITY

1.5 - Sensor Guide

ADJUSTABLE SENSORS GUIDE AND THERMAL SHIELD

Precision, safety and practicality

MODEL

P & PL

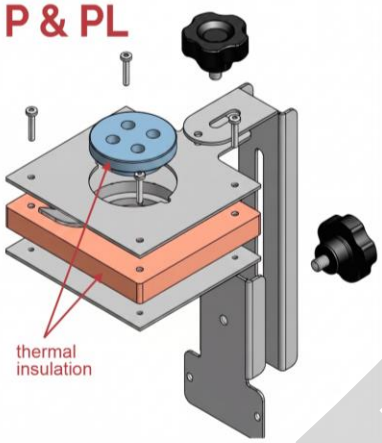

For baths with temperatures above 300 ºC. It has a thermal insulation plate that prevents the upward propagation of heat.

MODEL

NL

Smaller tab Ø 35 mm

MODEL

NLL & PLL

Larger guide Ø 59 mm

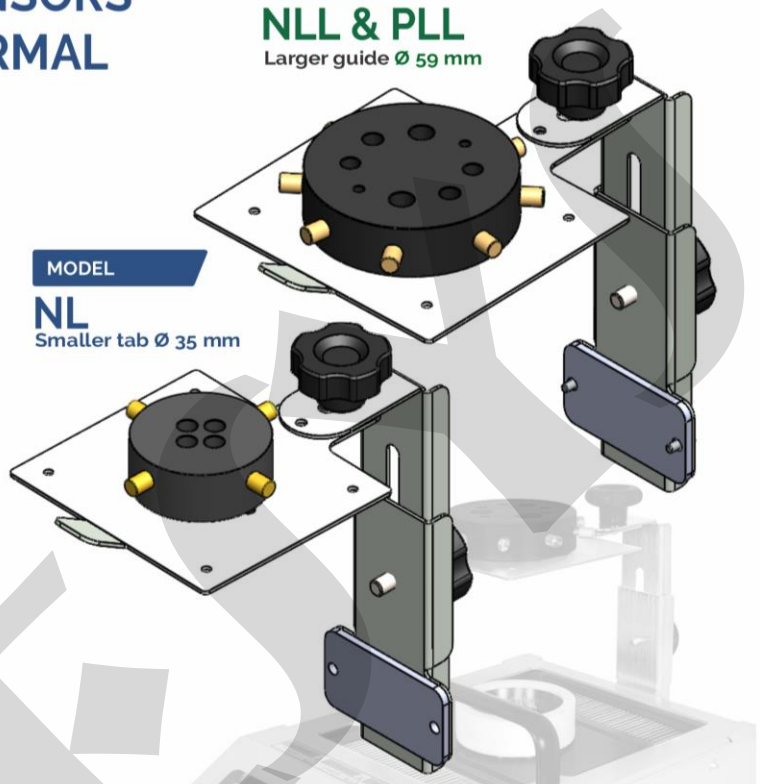

IMPORTANT INFORMATION

- Please specify which baths/insert will be used.
- Item included with the agitated liquid kit.

OBSERVATION

Compatibility for temperature calibrators with most recent design.

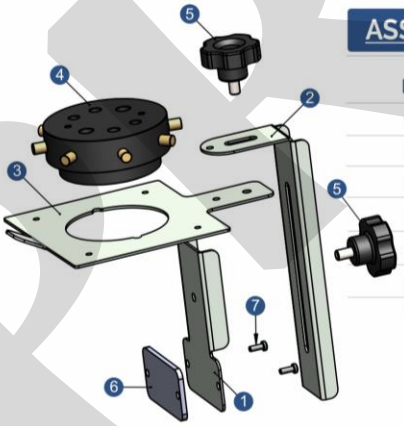

ASSEMBLY SUPPORT

Nº	QTY.	DESCRIPTION
1	1	Fixed support
2	1	Mobile support
3	1	Sensor guide support
4	1	Guide to sensors
5	2	Handle
6	1	Fixed support wedge
7	2	Fixing screw

ORDER CODE:

- 02.22.0125-00 with insulation board
- 06.09.0006-00 without insulation board

2 - Calibrator Operation

The calibrator keeps the block temperature controlled and allows the reading of a thermo-element connected to its terminals. It is possible to verify the thermocouple, thermoresistances, temperature transmitters etc. together with the block temperature value and temperature setpoint.

The calibrator has 3 operating modes:

Manual Mode to select the block temperature directly from the keypad.

- *Programmable Mode*: 6 different programs with 11 temperature setpoint values. The block temperature is selected among the programmed values by the keys ⇧ and ⇩. The *Programmable Mode with Timer* scans automatically the temperature setpoints.

- *Automatic Mode* to calibrate thermo-elements. The thermo-elements calibration is performed in an automatic way by the calibrator: the schedule and the calibration results, besides the thermo-element readings are stored in the calibrator memory.

When powered on (**ON/OFF** key), the calibrator goes through a self-test routine and shows the last calibration date and the value of the battery voltage. The battery voltage is constantly monitored and the low battery warning is provided. After the self-test is completed, the display shows the starting menu.

⇨ **IN**	**EXEC**	
CONF	**CAL**	**COM**

The initial setpoint is 25.00 ºC:

By means of keys ⇧, ⇩, ⇦ and ⇨, choose the menu options and press **ENTER**.

IN: selection of the calibrator signal input. Choose mV, ohms, thermocouple, RTD, mA, switch or none. More details in item *2.1 - Menu IN*.

EXEC: The calibrator enters the manual or programmable operating mode.

CONF: Accesses the calibrator configuration options. More details in item *2.2 - Menu CONF*.

CAL: This option accesses the calibrator adjustment functions, protected by password. More details in section *6 - Calibration (Adjustment)*.

COM: Accesses the automatic calibration parameters. It is possible to perform a calibration without a computer or using it (via the ISOPLAN software). More details in item *2.5 - Automatic Operating Mode*.

2.1 - Menu IN

```
⇨ mV     OHM     TC
  RTD    mA      SW      NO
```

mV, **mA**, **SW**: selects millivolt, milliampere or switch input, respectively.

OHM: selects ohms input. Following, choose from the menu the wiring in 2, 3 or 4-wire.

```
⇨ 2-WIRE          3-WIRE
  4-WIRE
```

TC: selects thermocouple input. Choose among the **J**, **K**, **T**, **E**, **N** and **L** types. In the next menu, the internal or manual cold junction compensation is chosen.

```
⇨ INTERNAL
  MANUAL
```

If the internal compensation is selected, the cold junction temperature value is displayed by the calibrator. If the **MANUAL** option is selected, the cold junction must be supplied by the operator. After confirming the value, by pressing **ENTER**, the calibrator goes back to the operating mode.

RTD: Selects the type of thermoresistance used. Choose from **PT100**, **NI100**, **CU10** and **PT1000** types. Choose also if the wiring is 2, 3 or 4-wire.

NO: Disables reading of external signal.

Selecting one of the options above, the calibrator goes straight to the manual operating mode, with no need to select the **EXEC** option.

PRESYS

2.1.1 - Input Connections Diagrams

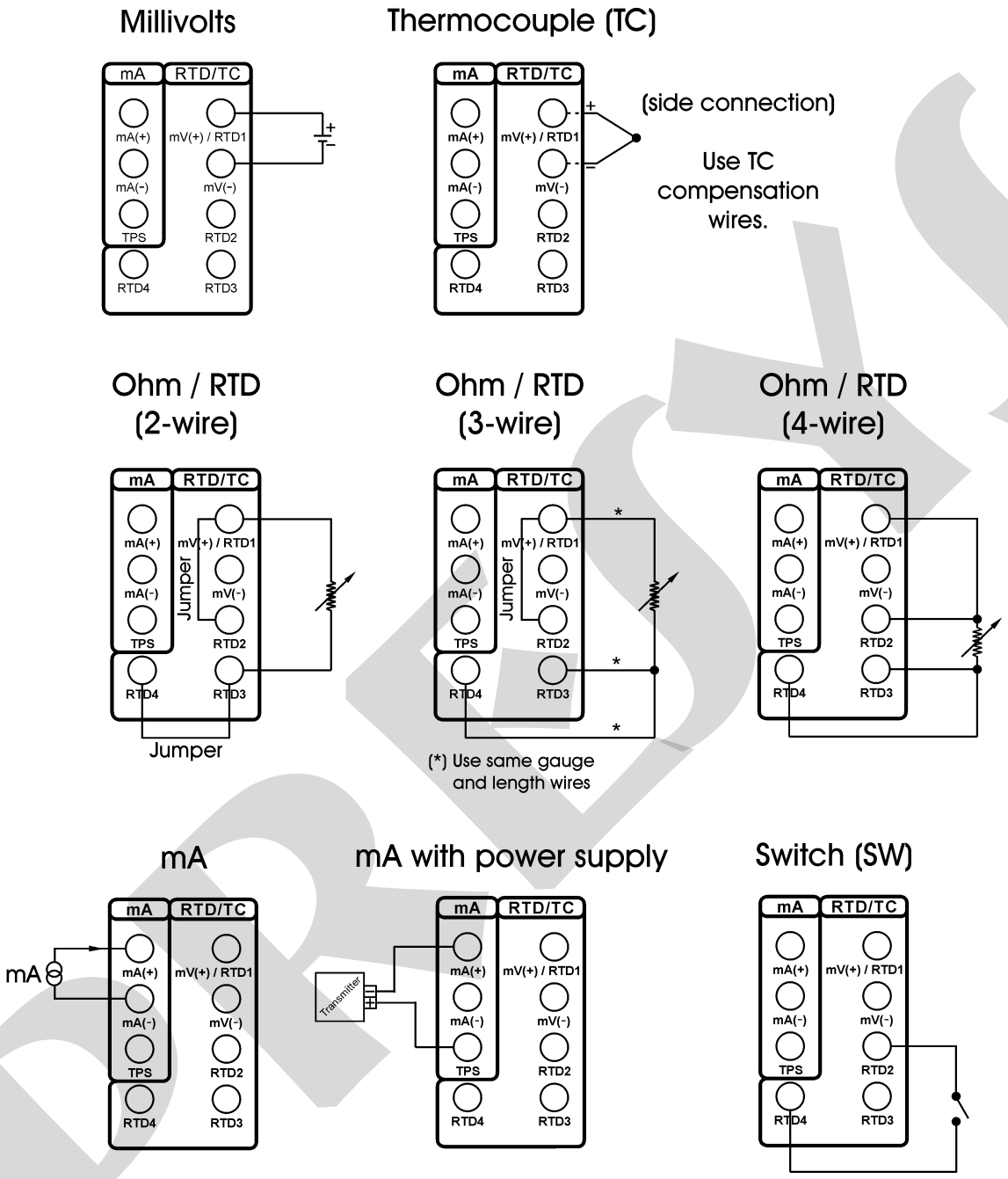

2.1.2 - External Probe Connection

Place the 4-wire Pt-100 standard sensor into the insert and plug the mini-DIN connector to the external probe input (**EXT. PROBE**) located on the calibrator front panel, as illustrated in the figure below:

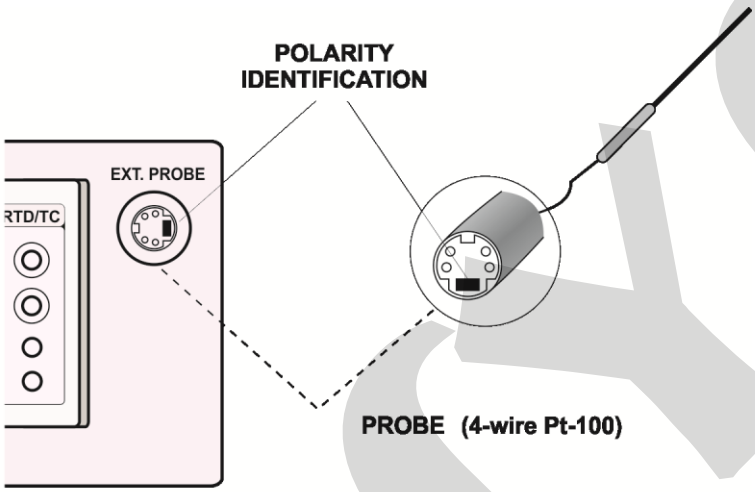

The temperature control with the external probe must be enabled by the **PRBe** option of the **PRG** menu. More details in item *2.2 - Menu CONF*.

2.2 - Menu CONF

⇨ CF	PRG	MEM		DSP
SC	BT	DT	BZ	TU

CF: Selects the temperature unit between ºC or ºF. The ITS-90 or IPTS-68 temperature scales are selected for both the thermo-element and for the internal block reference readings purpose.

⇨ ºC-90	ºF-90
ºC-68	ºF-68

DSP: This option sets the OLED display contrast. Use the key ⇧ and ⇩ until you get a better contrast and finish the operation by pressing the key **ENTER**.

BT: Shows the battery or the battery charger voltage value if the dry block is turned off or on, respectively.

Battery level	Battery state	Display
4.0 to 7.0 V	normal	----------
< 4.0 V	low	LOW BATTERY

DT: Updates the date and time of the calibrator. Thus, when the calibrator performs a calibration in the automatic mode via ISOPLAN, all data are registered together with date and time of occurrence. Every time the calibrator is powered off, the internal clock does not continue to be updated. However, the ISOPLAN software can automatically update the calibrator date and time with the computer internal clock. Otherwise, use keys ⇧ and ⇩ to change the field that blinks and the keys ⇨ and ⇦ to go to another field. The key **ENTER** confirms the last selection.

BZ: Menu that configures the piezoelectric buzzer.

⇨ NO	YES	ENDCAL

NO: Disables the buzzer.

YES: The buzzer beeps when the block reaches the setpoint and stabilizes.

ENDCAL: The buzzer beeps only at the end of a calibration in the automatic operating mode.

TU: Menu that configures the PID control parameters for the heating side. More details in section *6 - PID Control Parameters*.

```
⇨ K        I        D        FACT
```

K: Proportional gain

I: Integral gain

D: Derivative gain

FACT: Restore the control parameters to the factory values.

PRG: Menu that programs the calibrator.

```
⇨ DEC_IN        DEC_PRB
  SP        PRBe        MD
```

DEC_IN: Selects the number of decimals of the thermo-element reading. The default value depends on the input signal.

```
⇨ DEFAULT
  0    1    2    3    4
```

DEC_PRB: Selects the number of decimals of the block temperature and the setpoint value. The default number is 2.

```
  0    1    ⇨ 2
```

SP: Enables the calibrator *Programmable Operating Mode*, and allows the configuration of programmed values. The selected program is indicated by the selection arrow. Choose one of the **6** temperature programs or **NO** to disable this *Programmable Mode*.

Select any of the 6 programs and confirm with the key **ENTER.** Following, it is shown the menu of temperature setpoint configuration.

```
⇨ 10%        20%        25%
  VARIABLE
```

Change the configuration to steps (STEPS) of **10%**, **20%**, **25%**, **VARIABLE** or press **C/CE** to maintain the configuration already stored in memory. The temperature range of the program must be configured through the values in **SETPOINT HIGH** and **SETPOINT LOW** in case of **10%**, **20%** or **25%** fixed steps of the range. The option **VARIABLE** allows the user to define from 2 to 11 values of temperature setpoint, not necessarily in ascending order.

To verify the step values of a program, select the **VARIABLE** option and confirm the values shown in the display with the key **ENTER**. The **10%**, **20%** and **25%** options change the number of steps automatically and recalculate the values according to **SETPOINT HIGH** and **SETPOINT LOW**.

PRBe: This option enables the use of an external probe for the dry block temperature control when selecting **YES**. In order to use the internal probe, select **NO**. When enabling the external probe, configure the probe calibration parameters in the **PARAM** menu and the temperature unit in **CF** as degrees Celsius or Fahrenheit. The calibration parameters correspond to the R_0, A, B, and C coefficients of the Callendar-Van Dusen equation:

$$R(t) = R_0 \{1 + A.t + B.t^2 + C.t^3.(t - 100\ °C)\},\ C = 0 \text{ for } t \geq 0.$$

This equation is generally used in the IPTS-68 temperature scale, where t refers to the temperature in this scale and R_0 to the resistance at 0 °C. However, it can also be used in the ITS-90 scale.

The menu for the configuration of these coefficients is shown below:

⇨ **R0**	**A**	**B**	**C**
E_A	**E_B**	**E_C**	

To enter the value of a coefficient, it must be split into a mantissa and an exponent as it is used in scientific notation. For a C coefficient equal to -3.151052×10^{-2}, for example, type its mantissa (an integer and a fractional part with six digits) in the **C** mnemonic and its exponent, as an absolute value, in the **E_C** mnemonic. In this way, **C** = -3.151052 and **E_C** = 2.

Note that the signal can be inverted by pressing the key **ZERO** when the number on the display is zero. This changes the signal from **+** to **-**, or vice-versa.

The coefficients for the ITS-90 scale according to the IEC-60751 standard are shown below:

R_0 = 100.00000	
A = +3.908300	E_A = -03
B = -5.775000	E_B = -07
C = -4.183000	E_C = -12

MD: Maximum deviation from the setpoint for the temperature control with an external probe. The temperature is stabilized by the external control after it enters in the range limited by **SET ± MD**. If the external Probe value stabilizes at a value other than the setpoint ± MD value, this value can be increased. The default value for this parameter is 1.0 ºC.

SC: This function scales the input reading. The scaling is very useful in temperature transmitter calibration, for instance, because it displays the current temperature and the transmitter reading (mA) in the same unit. Thus, the error can be verified directly in ºC or ºF. Select the option **SC** and press **ENTER**. If no input is selected in **IN**, the calibrator will show the **SELECT INPUT FIRST** message. In this case, go to menu **IN** and select the input signal type.

The function **SC** will show **IN** or **NO.** Confirm **IN** to configure the scaling or **NO** to disable the **SC** function, with the key **ENTER**.

The scaling is performed via the **INPUT HIGH** and **INPUT LOW** parameters, corresponding to the maximum and minimum values of the calibrator signal input, in the engineering unit of this signal. Following, configure the **SCALE DEC (0-4)**, **SCALE HIGH** and **SCALE LOW** parameters according to the maximum and minimum values of the transmitter scale and the desired number of decimals. The scaled value is shown on the display with the **#** unit.

For example, temperature transmitter with 0 to 100 ºC input and 4 to 20 mA output. The scaling with one decimal would be:

INPUT HIGH: 20.0000 mA
INPUT LOW: 4.0000 mA
SCALE DEC (0-4): 1
SCALE HIGH: 100.0 #
SCALE LOW: 0.0 #

MEM: The calibrator allows many special programs and functions that can be of frequent use. In situations like this, it would be useful to store the current configuration in memory in order to save time. Up to 8 configurations can be stored in memory.

Selecting the option **MEM**, it is possible to store the current configuration (**WRITE**), restore a previous stored configuration (**RECALL**) or erase the 8 configurations from memory (**CLEAR ALL**).

⇨ **WRITE**	**RECALL**
CLEARALL	

Selecting the option **WRITE** or **RECALL** will present a new menu with numbers 1 to 8, representing each one of the memory positions. Choose one of the positions and press **ENTER**. The writing operation (**WRITE**) can be made in an already used memory position. The calibrator asks for the overwriting confirmation with the message **OVERWRITE MEMORY?**. The **CLEAR ALL** operation shows a confirming message **ARE YOU SURE?**. In both cases, press **ENTER** to confirm the operation or **C/CE** to cancel.

2.3 - Manual Operating Mode

The display shows the selected temperature value of the block and also the current block temperature or thermo-element temperature value.

There are 4 ways in which the information are shown, covering the calibrator input value (**IN**), the block temperature (**PRBi** or **PRBe**, measured with the internal or external probe, respectively) and the temperature setpoint (**SET**). The key ⇦ interchanges the display presentation way:

IN = 23.456 mV
PRBi/PRBe = 25.01 ºC

PRBi/PRBe = 25.01 ºC
SET = 25.00 ºC

23.456 mV

25.01 PRi/PRe ºC

The block temperature setpoint is selected directly by the keypad, even if the message **SET** is not being displayed. The numeric keypad enables the **SET** selection in any of the display presentation ways, to change the setpoint.

The setpoint value is increased by key ⇧ and decreased by key ⇩. While the keys are kept pressed, the setpoint continues to be increased or decreased.

When the display shows the temperature of the External Probe (PRBe), pressing the key ⇨, it will show the value of the resistance read, without the temperature calculation.

2.4 - Programmable Operating Mode

Pre-configured programs can be loaded from the calibrator memory, enabling the programmable operating mode. The temperature programmed values of the block are used directly, with no need to enter the setpoint.

The display shows **STEPn** beside the block temperature setpoint value in the programmable mode. The number of the program is indicated by **n**. Using the keys ⇧ and ⇩, the programmed values of temperature setpoint are changed. The numeric keypad continues available for manual selection of the block temperature in the same way of the manual operating mode.

The automatic scan over the programmed temperatures is implemented by defining the stabilization time of the thermo-element in the block.

The key ⇨ enables the automatic scan over the points. When pressed, the message **STEPn** gives place to **0s** and the calibrator waits for the stabilization time

configured from 1 to 9 minutes, by the keys **1** to **9**. The automatic scan is disabled by pressing key ⇨ again.

A countdown of the stabilization time is only started when the block temperature reaches the programmed temperature and stabilizes within a range of approximately ±0.05 ºC. At this time the buzzer beeps, in case it is configured to **YES**.

2.5 - Automatic Operating Mode

The thermo-element calibration is performed in an automatic way by the calibrator. The configuration, as well as the calibration verification is carried out by the calibrator itself. Also it is possible to use the ISOPLAN software and its work orders, like a CAC - Computer Aided Calibration.

The independent automatic calibration, without the use of ISOPLAN, is planned in the option **TAGMAN** from menu **COM**.

TAG	**EXEC**	**VERIF**
ADDRESS	⇨ **TAGMAN**	

Before you start programming, configure first the signal that will be read by the calibrator in the menu **IN**. To calibrate glass thermometers, for example, there is no electric signal to be read. In this case, option **IN** from the menu must be configured to **NO** and the calibrator will ask to enter the value indicated by the thermometer, at the end of the stabilization time of each calibration point.

The data for an automatic calibration concern:

- **TAG**: the thermo-element tag identification.
- **SP**: the block temperature reference values for the calibration (calibration points).
- **TOL**: the maximum tolerance for the thermo-element operation.
- **STB**: the stabilization time, in seconds, so that the thermo-element temperature indicates correctly. This timer starts just after the block reaches and stabilizes at the setpoint temperature.
- **STR**: the calibration strategy of the programmed reference values. The available strategies are: ⇧ (UP), ⇩(DOWN), ⇧⇩ (UP - DOWN), ⇩⇧ (DOWN - UP), ⇧⇩⇧ (UP - DOWN - UP) and ⇩⇧⇩ (DOWN - UP - DOWN).
- **RP**: the strategy number of repetitions.
- **RGI**: the thermo-element indication range.
- **RGO**: the operating temperature range that corresponds to the indication range above.

The automatic calibration begins when the option **EXEC** from menu **COM** is selected. All the operations are automatically performed by the calibrator. The keypad does not work until the end of the calibration.

At the end of the stabilization time, the calibrator stores the thermo-element reading in memory and goes to the next point, in case some input signal has been previously configured in the menu **IN** and connected to the calibrator terminals.

The **CALIBRATION END** message appears on the display at the end of the automatic calibration. Press **ENTER** to confirm. The results can be verified in option **VERIF** from menu **COM**.

The first message in option **VERIF** informs the calibration result, with the number of points that have succeeded. Following, press **ENTER** to verify each one of the readings performed by the calibrator. The keys ⇨ and ⇦ interchange 2 screens: one that displays the block and thermo-element temperature value and the other displays a message indicating the calibration point number and its state (**OK** or **FAIL**), besides the error value in %.

The option **TAG** from menu **COM** can present a list of up to 4 tags that have been downloaded or uploaded with the ISOPLAN software. The key **ENTER** selects the tag to be calibrated from the tag list. The automatic calibration starts by the option **EXEC** from menu **COM** and the calibration data can be verified in option **VERIF**. To calibrate automatically not using ISOPLAN, there is a reserved place for one manual tag. The selection of the manual tag is performed by confirming the option **TAGMAN** with the key **ENTER**.

The option **ADDRESS** selects the communication address of the calibrator. The communication protocol used is ModBus - RTU, with no parity and baud rate of 9600. The calibrator communication with the computer can use RS-232 or RS-485, for network option, according to the communication interface used. In order to communicate with the ISOPLAN software, configure **ADDRESS** to 1.

PRESYS

3 - Recommendations as regards Accuracy of Measurements

PRESYS dry block temperature calibrators are instruments of high accuracy level, requiring the observation of all the procedures described in this section, in order to achieve the necessary conditions to get the accuracy levels during the calibrations.

- Special attention should be paid in relation to the insert cleanliness. When necessary, it should always be washed with water and soap, well rinsed and dried. Oil, grease, solid particles can hinder the heat transference to the insert and even jam the insert inside the block.

- The sensor to be calibrated must fit snugly into the appropriate well. In case the sensor is loose, the measurement accuracy meaning can be completely senseless. The meaning of clearance between the sensor and the respective well should be understood in a subjective way and the common sense is very important. Thus, the sensor should enter the insert well (both completely clean) in such a way to stay snugly enough so that it cannot move or swing inside but it should not enter by force to get jammed.

3.1 - Getting a Better Accuracy from the Dry Block

The temperature control is based in the temperature measurement of an internal sensor placed in the block.

This control sensor is adjusted in factory by means of another sensor with high accuracy (probe) connected to a standard thermometer, as described in item *7.2 - Probe Calibration*. So, at factory, the accuracy of the standard thermometer is transferred to the dry block calibrator. The transference will be well performed only when there is a perfect temperature equilibrium between the internal control sensor and the standard thermometer. Therefore, it should not have any clearance between the insert and the block or between the probe and the insert. Both the internal sensor and the probe should also be at the same depth.

The user will get the best accuracy from the dry block, provided in this technical manual, in case one succeeds in reproducing the same conditions of the factory adjustment, that is, the same insert used in factory, no clearance, same depth etc.

Summing up, the important thing to get the best accuracy from the dry block is to reproduce the process used by the factory to adjust the dry block itself.

When a higher accuracy than that mentioned in the technical manual is necessary, one should use an external standard thermometer as a reference or standard to compare with the thermo-element under calibration.

In this case, the dry block is only used as a heat generator, not as a standard temperature calibrator. The user can use the fact that the dry block stability value is much lower than its accuracy value. So, placing the standard thermometer sensor and the thermo-element under calibration in a two-hole-insert, it is possible to compare both temperature measurement.

3.2 - Recommendations to Other types of Insert

When the user uses a different type of insert, other than the one used to adjust the dry block, for example the cup like insert fulfilled with tiny steel balls, the accuracy from the manual is no longer valid, since the thermal contact is different in relation to that insert.

However, another control sensor adjustment can be performed to the new insert. Do that using an external probe with high accuracy, placed in the new insert and follow the steps described in item 7*.2 - Probe Calibration*.

This new readjustment of the calibrator indication overwrites the factory calibration and it remains even after turning off the dry block.

Should you want the factory calibration back again, activate the option **RESTORE** from menu calibration / probe.

PRESYS

4 - Safety Instructions

- If the calibrator is turned on, do not leave the room without an identification or warning about the high temperature hazard.
- Before turning the calibrator off, return the block temperature to values close to the ambient temperature.
- Never remove the insert from the dry block or the thermo-elements from the insert, while they are in temperatures far from the ambient. Wait until they reach the ambient temperature so that the heterogeneous cooling of the parts do not jam each other. If, by chance, it happens a jamming situation, refer to item *8.2 - Instructions for Insert Jamming* to proceed properly.
- Never interchange a T-650P insert to an insert from a different temperature range calibrator (like T-350P), because in spite of having the same diameter, it is made of a different material not resistant to high temperature.

5 - Calibrator Warning Messages

Warning	Meaning	Procedure
RAM ERROR READ MANUAL	Problem in RAM memory	Turn the calibrator off and on. If the error persists, contact Presys Technical Support
EEPROM ERROR READ MANUAL	Problem in EEPROM memory	Same as the previous item
LOW BATTERY	Level of battery voltage is low	Check the calibrator power supply
UNDER / OVER	Input signal out of specifications or scaling range	See item 1.1.1 on Input Specifications
????.??ºC	Input sensor is open	Check input connections and sensor
PRBe = ????? °C	External Probe is open	Connect an external probe or disable the external Probe function in CONF > PRG> PRBe> NO

6 - PID Control Parameters

The T-350P and T-650P temperature calibrators have a PID control algorithm to calculate the block control output.

The dry block stability and response time features are related to the PID parameters, explained below:

The K parameter (proportional gain) amplifies the error signal between the setpoint and the block temperature to establish the output signal. When this parameter is very high, the output reaction is very quick, however this can take the system into oscillation. Decreasing this parameter, the dry block would not be able to react quickly enough to external variations, giving the impression of a sudden out of control.

The I parameter (integral gain) is responsible for the integral action and it is the most important part in the setpoint control. While an error persists between the setpoint and the block temperature, the integral action will actuate on the output signal until the error is brought to zero.

The D parameter (derivative gain) is responsible for the derivative action that provides a quick response at the control output resulting from any rapt variation in the block temperature. It is used to eliminate oscillations. However, it can cause oscillations in the presence of much noise.

All temperature calibrators are tuned in factory and the parameters are close to the optimum ones. In case one wants to improve a specific feature of the calibrator (stabilization time or response time, for instance), make sure the alteration is made reasonably.

PRESYS

7 - Calibration (Adjustment)

ATTENTION: To prevent potential damage to the instrument's calibration due to improper adjustments, the access password must be requested from your local distributor.

Adjustment procedure access password: To perform input or output adjustments, the owner of the calibrator must contact the local distributor, providing the equipment's **serial number** to receive the password that allows access to the adjustment.

WARNING: Enter the following options only after understanding them completely. Otherwise, it may be necessary to return the instrument to the factory for recalibration!

Select **CAL** option from the main menu and press the **ENTER** key. You should then enter the password (**PASSWORD**) to access the calibration menu.

The password functions as a protection to calibration ranges. After the password is entered, the menu displays the options:

⇨ **IN**	**OUT**	**DATE**

You should then choose the input range (**IN**) as the output range (**OUT**) is not available for the user. **DATE** is an option which allows you to record the date on which the calibration was performed and once it has been filled in, it will be displayed every time the calibrator is turned on.

Options for **IN** calibration are:

⇨ **mV**	**mA**	**OHM**	**CJC**
PROBE			

7.1 - Input Calibration

Select the corresponding mnemonic and apply the signals presented in the tables below.

When calibrating inputs, the display shows on the 2nd line the value measured by the calibrator and on the 1st line the same value is expressed as a percentage.

Note that the applied signals just need to be close to the values shown in the table.

Once the signal has been applied, store the values of the 1st and 2nd calibration points, by pressing keys 1 (1st point) and 2 (2nd point).

mV Input	1st point	2nd point
G4	0.000 mV	70.000 mV
G3	0.000 mV	120.000 mV

G2	0.000 mV	600.000 mV
G1	600.000 mV	2400.000 mV

mA Input	1st point	2nd point
Single range	0.0000 mA	20.0000 mA

Input calibration for Ω is performed in two steps:

a) Application of mV signal:
For the calibration below, leave terminals RTD3 (+) and RTD4 (+) short-circuited.

mV Signal	Terminals	1st point	2nd point
V_OHM3	RTD3(+) and mV(-)	90.000 mV	120.000 mV
V_OHM4	RTD4(+) and mV(-)	90.000 mV	120.000 mV

b) Application of standard resistors:
Connect a decade box or standard resistors on terminals RTD1, RTD2, RTD3 and RTD4 (4-wire connection).

resistors	1st point	2nd point
OHM3	20.000 Ω	50.000 Ω
OHM2	100.000 Ω	500.000 Ω
OHM1	500.000 Ω	2200.000 Ω

The cold junction calibration (CJC) is performed measuring the mV(-) terminal temperature. Store only the 1st point.

Cold Junction	1st point
CJC	32.03 ºC (measured value)

7.2 - Probe Calibration

The options of calibration / probe are:

⇨ **ºC** **RESTORE**

ºC: Adjust of the internal temperature sensor (internal Probe).

RESTORE: Restores the internal temperature sensor calibration parameters to the factory values.

To readjust the internal Probe it is necessary to compare the value indicated by the calibrator (Probe) and the temperature value from an external probe placed in the dry block insert. The temperature of the external probe should have high accuracy and should be measured by a standard thermometer.

The option to adjust the internal sensor has seven points of adjustment. These points are recorded via keys 1 to 7.

Before starting the calibration (adjustment), record in these points the respective initial storing values, according to the table below.

Go to the manual operating mode (menu **EXEC**) and generate all the seven levels of temperature (setpoints from the table), writing down the value indicated by the standard thermometer. Now, go back to the option CAL > Probe > ºC and record the values indicated by the standard thermometer. All values must be in °C unit.

For T-350P:

Setpoint of the temperature generated	Initial value to record	Standard Indication	New value to record	New indication of the Standard	key
50	50.00	49.966	49.97	49.995	key 1
100	100.00	99.956	99.96	99.995	key 2
150	150.00	149.937	149.94	149.990	key 3
200	200.00	199.914	199.91	200.009	key 4
250	250.00	249.853	249.85	250.000	key 5
300	300.00	299.820	299.82	299.995	key 6
350	350.00	349.780	349.78	350.005	key 7

For T-650P:

Setpoint of the temperature generated	Initial value to record	Standard Indication	New value to record	New indication of the Standard	key
50	50.00	49.971	49.97	49.995	key 1
150	150.00	149.964	149.96	149.995	key 2
250	250.00	249.943	249.94	249.990	key 3
350	350.00	349.906	349.91	350.009	key 4
450	450.00	449.847	449.85	450.000	key 5
550	550.00	549.815	549.82	549.995	key 6
650	650.00	649.782	649.78	650.005	key 7

PRESYS

8 - Maintenance

8.1 - Instructions for Hardware

There are no parts or components in the T-350P and T-650P temperature calibrators that can be repaired by the user. Only the 6Amp fuse, placed within the socket on the rear can be replaced by the user (10 Amp fuse for model T-650P 115 Vac).

The fuse may blow due to a voltage spike in the mains or a calibrator component fault. Replace the fuse once. If a second fuse blows again, it is because the fault is not that simple. Contact Presys Technical Support.

8.2 - Instructions for Insert Jamming

If, by chance, it happens that an insert jams inside the block or a sensor jams inside a insert, proceed as follows:

1- apply a lubricant oil between the parts;

2- apply cooling liquid inside the insert wells in order to contract the insert;

3- try again to withdraw the insert.

For insert jamming cases, after taking it out, sand both the surfaces with a thin sandpaper, polish them with an suitable paste and finally clean the parts using alcohol or solvent.

PRESYS

9 - Tiny Steel Balls, Recommendations of Use and Safety Instructions

The dry block calibrators are offered including a plastic container with tiny steel balls.

This item is an exclusive accessory of PRESYS dry block calibrators, which also provide a cup-like insert that is an insert drilled with the maximum allowed diameter, proper for being filled with the tiny balls.

With both the cup-like insert and the tiny balls, it is possible to calibrate temperature sensors with irregular shape or whose dimensions do not match the available insert holes. One should place the sensor to be calibrated in the insert and fulfill the remaining volume with the tiny balls.

It is important to note that accuracy gets worse in this kind of procedure because the dry block is calibrated in factory using an insert with an appropriate well that fits the standard sensor snugly. Thus, the accuracy specifications presented in this manual are not valid any more. Anyway, consider an increase of up to five times the accuracy values.

To use the tiny balls and continue achieving accurate measurements it is necessary to read from an external reference sensor tied together with the sensor to be calibrated both plunged in the tiny balls. In order to join the sensors, one can use rigid copper wire. Wind them with several turns starting from the tip of the sensors.

Safety Instructions:

Take care when using the cup-like insert and the tiny balls of steel. Handle the balls or the sensors only when they are at ambient temperature. Operate the dry block calibrator in a proper location to prevent it from falling down or even to prevent the balls at high temperature from being spilled outside causing body burn or other damages or injuries.

PRESYS

PRESYS